BRANCHING FLOOR LIGHT FL.02.01

LINDSEY ADELMAN STUDIO

H 72*in*/183*cm* W 34*in*/86*cm* D 29*in*/74*cm* WT 12*lb*/5*kg* MAX 120*w* *Shown with one 9" globe and one 7" globe*

FRONT

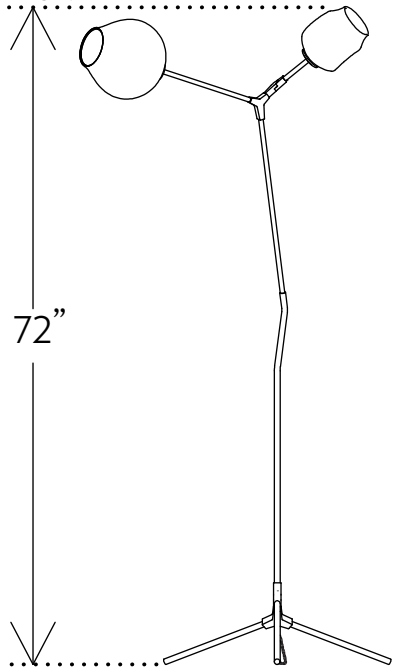

SIDE

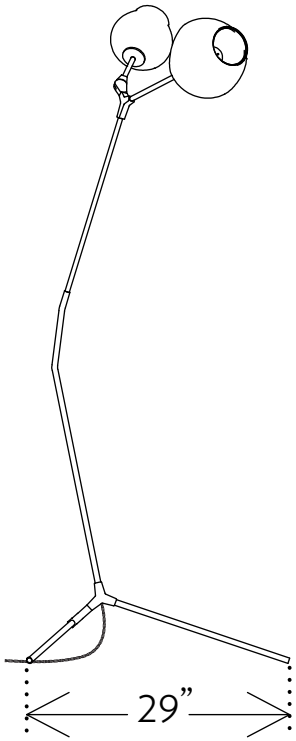

TOP

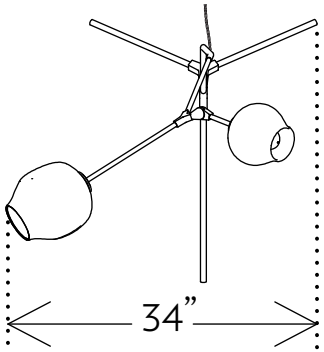

twentieth
sales@twentieth.net 323-904-1200
7470 Beverly Blvd, Los Angeles, CA 90036

BRANCHING FLOOR LIGHT

LINDSEY ADELMAN STUDIO

Inspired by natural phenomena, Branching explores the visual tension that results from mixing hand-blown glass with machine-made metal parts. Lindsey Adelman and her team design and build each fixture in their Manhattan studio.

MATERIALS	Machined Brass Glass
SHADES	One 9” Glass Globe and one 7” Glass Globe

BULBS	BULB TYPE	SOCKET	WATTAGE	COLOR TEMPERATURE	PLUG
110V	LED Globe	e26	6w	2500k	North America 2-prong
220V	LED Globe	e27	6w	2500k	C-type plug

ADDITIONAL	Alternative plugs available, please inquire

twentieth
sales@twentieth.net 323-904-1200
7470 Beverly Blvd, Los Angeles, CA 90036