GABRIEL SCOTT

est 2012

PRONG

Coffee Table

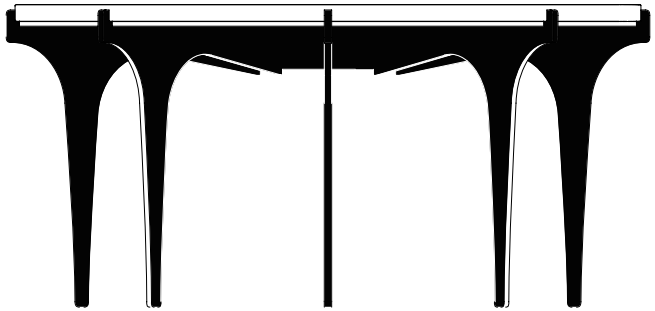

twentieth

sales@twentieth.net 323-904-1200
7470 Beverly Blvd, Los Angeles, CA 90036

PRONG
Coffee Table

GABRIEL SCOTT
est 2012

Inspired by precious stones and pronged settings found in precious jewelry, the Italian and Turkish marble tops available in the PRONG tables appear to be floating atop their tall legs.

Base available in black steel with brass hardware, in all brass, or all copper. Various marble top options available.

All Gabriel Scott pieces are handmade in Canada.

twentieth
sales@twentieth.net 323-904-1200
7470 Beverly Blvd, Los Angeles, CA 90036

PRONG
Coffee Table

GABRIEL SCOTT
est 2012

twentieth
sales@twentieth.net 323-904-1200
7470 Beverly Blvd, Los Angeles, CA 90036

PRONG
Coffee Table

3/4

GABRIEL SCOTT
est 2012

twentieth
sales@twentieth.net 323-904-1200
7470 Beverly Blvd, Los Angeles, CA 90036

PRONG
Coffee Table

4/4

GABRIEL SCOTT
est 2012

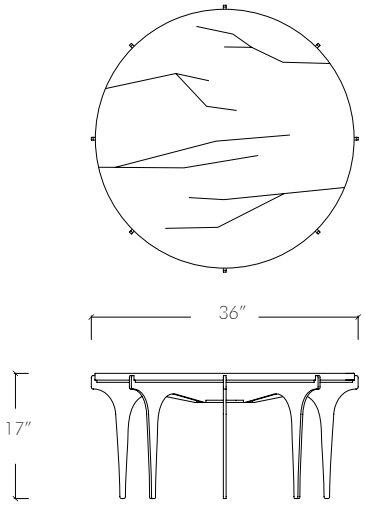

Standard Round
Coffee Table

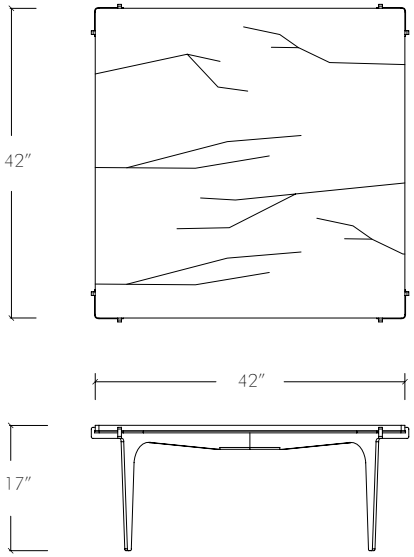

Standard Square
Coffee Table

Specifications

Overall Dimensions:

Standard Round: 36 D″ x 17″ H
Standard Square: 42″ x 42″ x 17″H

Custom sizes available upon request

MSRP:

Starts at $5,250 USD

Standard Lead Time:

12-14 weeks

Standard Base Finish Options:

Black Steel w/ Satin Brass Hardware
Satin Brass base w/ Satin Brass Hardware
Satin Copper base w/ Satin Copper Hardware

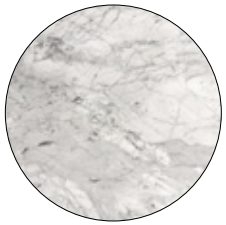

White Carrara
Italian Marble

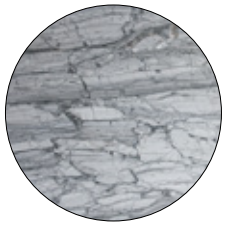

Zebra Gray
Turkish Marble

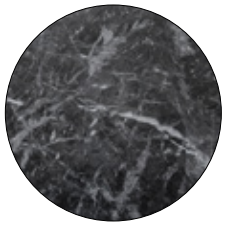

Grigio Carnico
Italian Marble

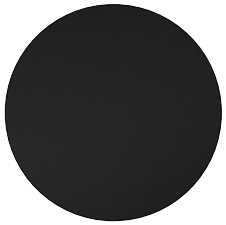

Matte Black

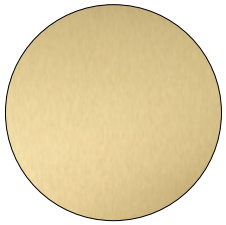

Satin Brass

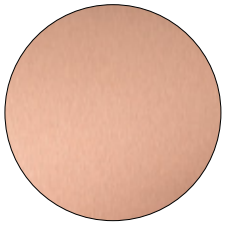

Satin Copper

twentieth
sales@twentieth.net 323-904-1200
7470 Beverly Blvd, Los Angeles, CA 90036